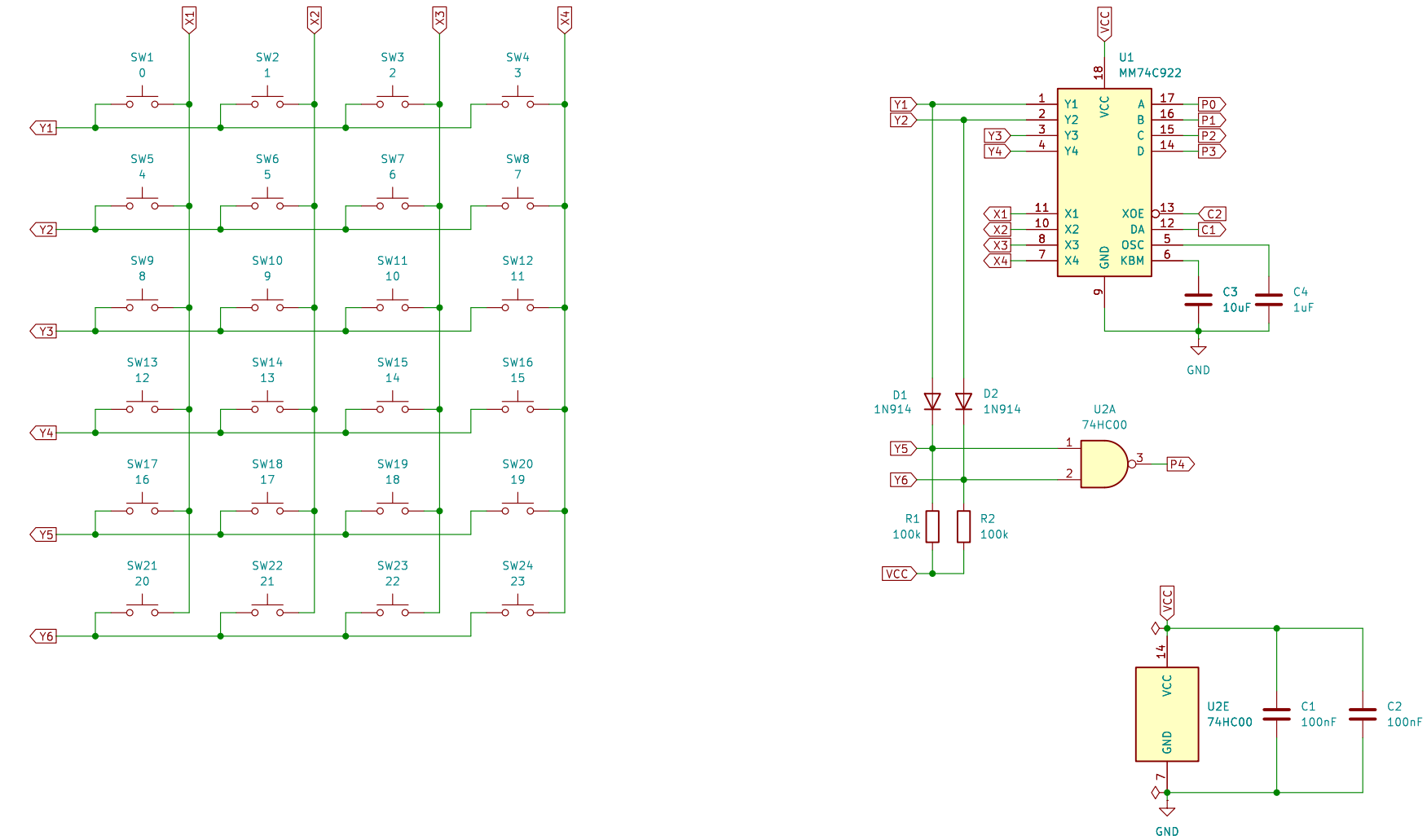

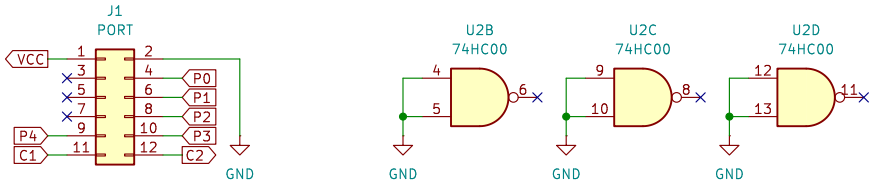

6502

A.C. Wright Design

Sheet: /

File: Keypad Helper.kicad_sch

Title: 6502 Keypad Helper

Size: USLetter	Date: 2024-08-06	**Rev: 1.0**
KiCad E.D.A. 9.0.7		Id: 1/1